IOWA DEPARTMENT OF NATURAL RESOURCES

CONSTRUCTION DRAWINGS
FOR
DESIGN GUIDE SHELTER
AT
RED HAW STATE PARK
LUCAS COUNTY, IOWA

PROJECT # 22-05-04-02

PLANS PREPARED BY

LAND AND WATERS BUREAU

CONSERVATION AND RECREATION DIVISION

IOWA ONE CALL
1-800-292-8989
www.iowaonecall.com
811 Know what's below. Call before you dig.

REGISTERED PROFESSIONAL ARCHITECT
RYAN E. RICHEY
06461
IOWA

I hereby certify that this architectural document was prepared by me or under my direct personal supervision and that I am a duly Registered Professional Architect under the laws of the State of Iowa.

Ryan E Richey

Digitally signed by Ryan E Richey
DN: CN=US, E=ryan.richey@dnr.iowa.gov, O=Iowa Department of Natural Resources, OU=Engineering Service - L&W Bureau, CN=Ryan E Richey
Date: 2023.07.19 13:35:51-05'00'

RYAN E. RICHEY DATE

My license renewal date is JUNE 30, 2025.

Pages or sheets covered by this seal:

A-001 – A-502

SHEET INDEX

SHEET. NO.	SHEET TITLE
	ARCHITECTURAL
A-001	COVER SHEET
A-002	PROJECT NARRATIVE AND NOTES
A-003	PROJECT LOCATION
A-005	SITE DEMOLITION PLAN
A-010	BEACH SHELTER SITE PLAN
A-011	SITE DETAILS
A-500	SHELTER PLAN, SECTION, AND DETAILS
A-501	SHELTER ELEVATIONS AND DETAILS
A-502	BRACKETS AND CONNECTORS

BID ITEMS

ITEM #	ITEM DESCRIPTION	ESTIMATED QUANTITY
1	MOBILIZATION	1 LS
2	DEMOLITION AND SALVAGE	1 LS
3	CONSTRUCTION STAKING	1 LS
4	GRADING	1 LS
5	DESIGN GUIDE SHELTER (ALL INCLUSIVE)	1 LS
6	6" REINFORCED PCC SHELTER SLAB AND SUBBASE	155 SY
7	5" REINFORCED PCC SIDEWALKS AND SUBBASE	190 SY
8	ADA PARKING AREA AND ACCESSORIES	1 LS
9	GRILL AND SLAB	1 EA
10	ELECTRICAL	1 LS
11	CLASS A ROAD STONE	100 TONS
12	SITE RESTORATION (FILL, SEEDING AND FERTILIZING)	1 LS

AUTHORIZATION TO BID

Travis Baker — Digitally signed by Travis Baker Date: 2023.07.19 16:27:40 -05'00'

ENGINEERING BUREAU CHIEF DATE

Seth Moore — Digitally signed by Seth Moore Date: 2023.07.20 08:03:20 -05'00'

AUTHORIZED - PARKS | WILDLIFE | FISHERIES | LAW ENFORCEMENT DATE

DIRECTORY

OWNER		DISTRICT INSPECTOR	
COMPANY	IOWA DEPARTMENT OF NATURAL RESOURCES	COMPANY	IOWA DEPARTMENT OF NATURAL RESOURCES
ADDRESS	502 E. 9TH. ST.	ADDRESS	
CITY,STATE,ZIP	DES MOINES, IA 50319	CITY,STATE,ZIP	INDIANOLA, IA
CONTACT	N/A	CONTACT	JASON KRUSE
TELEPHONE	515.725.8200	TELEPHONE	515.250.3707
FAX	515.725.8202	FAX	–
EMAIL	N/A	EMAIL	JASON.KRUSE@DNR.IOWA.GOV
ARCHITECT			
COMPANY	IOWA DEPARTMENT OF NATURAL RESOURCES		–
ADDRESS	502 E. 9TH. ST.		–
CITY,STATE,ZIP	DES MOINES, IA 50319		–
CONTACT	RYAN RICHEY		–
TELEPHONE	515.979.0107		–
FAX	–		–
EMAIL	RYAN.RICHEY@DNR.IOWA.GOV		–
	–		–
	–		–
	–		–
	–		–
	–		–
	–		–
	–		–
	–		–
	–		–
	–		–
	–		–
	–		–
	–		–
	–		–

CONSULTANT:

IOWA DEPARTMENT OF NATURAL RESOURCES
ENGINEERING SERVICES - WALLACE BUILDING
502 E. 9TH ST., DES MOINES, IA 50319-0034
P: 515.725.8200
F: 515.725.8202

COVER SHEET

DESIGN GUIDE SHELTER FOR:
RED HAW STATE PARK

CHARITON, IA 50049

24550 US 34

NO.	BY / DATE	REVISION

DRAWN BY: | PROJECT NUMBER: 22-05-04-02

CHK'D BY: | DATE: 07.25.2023

SHEET No: A-001

DIMENSION NOTES

1. IN INTERIOR SPACES THE ACTUAL DIMENSIONS MAY BE LESS IMPORTANT THAN IF AT TWO ELEMENTS IN THE BUILDING WERE TO BE EQUAL. IN THESE CASES, THE WORD "EQUAL OR EQ" IS USED IN LIEU OF THE ACTUAL DIMENSIONS.
2. WHEN A ROOM CENTERLINE IS INDICATED ONLY ONE SIDE OF THE ROOMS ELEMENTS MAY BE DIMENSIONED.
3. COLUMN IDENTIFICATION: DETAILS WILL GOVERN ALL DIMENSIONS AND NO DIMENSIONS WILL BE SHOWN ON SMALL SCALE PLANS.
4. PARTITION CENTERED ON COLUMN OR GRID LINES WILL NOT BE DIMENSIONED ON SMALL SCALE PLANS.
5. PARTITION WITH A FINISHED FACE FLUSH WITH FINISH FACE OF COLUMN WILL NOT be DIMENSIONED ON SMALL SCALE PLANS.
6. PARTITION FINISH FACE ON COLUMN OR GRID LINE WILL NOT BE DIMENSIONED ON SMALL SCALE PLANS .
7. WHEN ONE JAMB OCCURS AT A COLUMN OR GRID LINE NO DIMENSIONS WILL BE SHOWN ON THE SMALL SCALE PLANS. THE OPENING WIDTH WILL BE GOVERNED BY CRITERIA OR SCHEDULES.
8. WHEN NEITHER JAMB OCCURS AT A COLUMN OR GRID LINE ONE JAMB WILL BE DIMENSIONED.
9. DOOR LOCATIONS ARE TO BE LOCATED BY ONE OF FOLLOWING:
   a. ONE JAMB FACE LOCATED BY A PARTITION AT RIGHT ANGLE. 4"TYPICAL UNLESS INDICATED ON PLAN.
   b. OR AS DIMENSIONED ON PLAN.
10. PARTITIONS ARE DIMENSIONED TO FACE OF CMU OR FACE OF STUD UNLESS OTHERWISE NOTED.
11. DIMENSIONS ARE INDICATED IN THE DOCUMENTS. THE DRAWINGS SHALL NOT BE SCALED FOR DIMENSIONS.

MATERIAL LEGEND

EARTH
COMPACTED EARTH
GRASS
GRAVEL
clay
fence
turf block
pavers
CONCRETE MASONRY UNIT
metal stud
PARTICLE BOARD
PLYWOOD
BATT INSULATION
ACOUSTICAL CEILING TILE
plastic
carpet
GYPSUM / STUCCO
grout
sand
foam INSULATION
RIGID INSULATION
ALUMINUM
STEEL
FINISHED WOOD
brick
CONCRETE
ASPHALT
cast stone
stone
glass
WOOD BLOCKING
CONTINUOUS WOOd

SYMBOL LEGEND

NORTH AAROW
00 TITLE SCALE: 0 = 0'-0" — DRAWING / DETAIL IDENTIFICATION
00 A-000 — SECTION REFERENCE
00 A-000 — DETAIL REFERENCE
00 A-000 — EXTERIOR ELEVATION
00/A-100 — INTERIOR ELEVATION
ELEVATION : 0'-0" DESCRIPTION1 — ELEVATION TARGET
1 A — COLUMN GRID
00 A-000 / 00 A-000 — MATCH LINES
ROOM 000 — ROOM/SPACE IDENTIFICATION
100 — DOOR TAG
00 — WINDOW TAG
00 — WALL TYPE REFERENCE
KEYNOTE NUMBER -NEW C.S.I. DIVISION/KEY
00 — KEYNOTE - DEMOLITION
00 — KEYNOTE - NEW/RENOVATION
00 — KEYNOTE - FINISH/ACCESSORY
℄ — PROPERTY LINE REFERENCE
℄ — CENTER LINE REFERENCE
0" — LEVEL CHANGE REFERENCE
DETAIL CUT LINE
1 — REVISION NUMBER AND CLOUD

GENERAL NOTES

THE FOLLOWING GENERAL NOTES SHALL PERTAIN TO THE ENTIRE SET OF CONTRACT DOCUMENTS

1. A GENERAL CONTRACTOR SHALL NOTE THAT THE ARCHITECTURAL DRAWINGS ARE ESTABLISHING A MINIMUM MATERIAL OR CONSTRUCTION METHOD STANDARD. THE GENERAL CONTRACTOR SHALL PROVIDE A BID PRICE BASED ON THE SPECIFIC MATERIALS NOTED.
2. DO NOT SCALE DRAWINGS. IF DIMENSIONS ARE IN QUESTION, THE CONTRACTOR SHALL BE RESPONSIBLE FOR OBTAINING CLARIFICATION FROM THE ARCHITECT BEFORE CONTINUING WITH CONSTRUCTION.
3. GENERAL CONTRACTOR AND SUBCONTRACTORS SHALL PERFORM THEIR WORK IN ACCORDANCE WITH ALL APPLICABLE CODES GOVERNING EACH TRADE.
4. THE CONTRACTOR SHALL MAINTAIN A CLEAN AND ORGANIZED JOB SITE, ACCEPTABLE TO THE OWNER.
5. THE CONTRACTOR SHALL COORDINATE THE SEQUENCE OF WORK WITH THE OWNER REPRESENTATIVE..
6. THERE SHALL BE NO DEVIATION BY THE GENERAL CONTRACTOR FROM THE CONSTRUCTION DOCUMENTS UNLESS APPROVED IN WRITING BY THE ARCHITECT.
7. EACH CONTRACTOR SHALL VERIFY EXISTING CONDITIONS IN THE FIELD PRIOR TO THE INITIATION OF WORK AND SHALL NOTIFY THE ARCHITECT OF ANY DISCREPANCIES OR CONDITIONS INTERFERING WITH THE ABILITY OF THE CONTRACTOR TO COMPLETE WORK AS OUTLINED ON THE CONSTRUCTION DRAWINGS.
8. ALL CONTRACTORS ARE REQUIRED TO COORDINATE THEIR WORK WITH OTHER TRADES. LACK OF THIS COORDINATION RESULTING IN ADDED COST TO THE CONTRACT WILL BE BORNE BY THE CONTRACTOR.
9. GENERAL CONTRACTOR SHALL BE RESPONSIBLE FOR KEEPING THE EXISTING BUILDING WATER TIGHT DURING CONSTRUCTION.
10. THE CONTRACTOR WILL VERIFY THAT EXIT EGRESS IS MAINTAINED FOR ALL OCCUPIED AREAS OF THE BUILDING THROUGHOUT ALL PHASES OF CONSTRUCTION.
11. PLAN DIMENSIONS ARE GIVEN TO FACE OF STUD OR BLOCK WALL. "CLEAR" DIMENSIONS ARE GIVEN TO THE FACE
12. THE OWNER WILL ASSUME ALL LIABILITY AND SHALL TAKE PERSONAL RESPONSIBILITY FOR ANY DECISIONS THAT THEY MAKE TO CHANGE OR ALTER THE CONSTRUCTION DOCUMENTS WITHOUT THE ARCHITECT'S WRITTEN APPROVAL.
13. PROTECT ALL EXISTING FINISHES AND MATERIALS TO REMAIN, IN ACCORDANCE WITH ACCEPTABLE TRADE PRACTICES, MANUFACTURER, RECOMMENDATIONS, OR AS DIRECTED BY THE ARCHITECT.
14. CUTTING OF EXISTING CONSTRUCTION FOR THE INSTALLATION OF ALL NEW WORK BY ALL TRADES, AND THE SUBSEQUENT PATCHING THEREOF, SHALL BE THE RESPONSIBILITY OF THE GENERAL CONTRACTOR, WHETHER THE WORK IS DONE BY HIS OWN FORCES OR NOT. GRINDING OF MATERIALS FOR REMOVAL SHALL NOT BE PERMITTED. CUTTING SHALL BE TO STRAIGHT LINE. UNWORKMAN-LIKE CUTTING, DAMAGE RESULTING THEREFROM AND UNACCEPTABLE PATCHING SHALL BE REPAIRED AND/OR REPLACED TO AN ACCEPTABLE CONDITION APPROVED BY THE ARCHITECT. A OWNER PROJECT REPRESENTATIVE SHALL BE NOTIFIED PRIOR TO CUTTING OF ANY STRUCTURAL ITEM (I.E. CONCRETE FLOOR, MASONRY, WALL, ETC.) WITHIN THE EXISTING BUILDING. METHOD OF CUTTING SHALL BE APPROVED BY THE OWNER PROJECT REPRESENTATIVE.
15. PATCHING MATERIAL SHALL MATCH EXISTING ADJACENT MATERIALS AS CLOSELY AS POSSIBLE IN COLOR, PATTERNS, AND/OR TEXTURES.
16. ALL SALVAGE MATERIALS REMOVED SHALL REMAIN THE PROPERTY OF THE OWNER. ALL NON-SALVAGE CONSTRUCTION MATERIALS AND DEBRIS FROM DEMOLITION WORK SHALL BE REMOVED FROM THE SITE AS WORK PROGRESSES, UNLESS OTHERWISE NOTED.
17. ISOLATE ALL DISSIMILAR METALS. G SHALL REQUEST APPROVAL BY THE ARCHITECT FOR MATERIALS USED FOR THIS PURPOSE, PRIOR TO INSTALLATION.
18. SEALANTS SHALL BE COMPATIBLE WITH ADJACENT SURFACE(S) THAT ARE IN CONTACT. REFER TO SPECIFICATIONS FOR APPROVED MANUFACTURERS AND PROCEDURES.
19. CAULK JOINTS OF DISSIMILAR EXPOSED TO VIEW MATERIALS AS REQUIRED BY THE ARCHITECT.
20. ALL DOOR HARDWARE TO BE FL. ADA COMPLIANT.
21. ALL EXTERIOR WALLS, DOORS AND WINDOWS ARE EXISTING U.N.O.
22. ALL FINISHES TO BE PER CLASS INDICATED ON A-004
23. NO CONSTRUCTION SHALL OCCUR WITHOUT SHOP DRAWING APPROVAL. SHOP DRAWINGS TO BE PROVIDED TO ARCHITECT FOR REVIEW UPON BEING REVIEWED AND SIGNED/DATED BY THE GENERAL CONTRACTOR AND SHALL INCLUDE BUT NOT BE LIMITED TO THE FOLLOWING ITEMS:
    - CABINETRY MILLWORK
    - RUNNING TRIM AND CASING PROFILES
    - PAINT/LAMINATE COLOR SAMPLES
    - ACOUSTICAL CEILING AND GRID
    - TOILET ACCESSORIES
    - KITCHEN EQUIPMENT
    - ROOF PENETRATIONS
    - HVAC EQUIPMENT
    - PLUMBING EQUIPMENT AND FIXTURES
    - ELECTRICAL EQUIPMENT AND FIXTURES
24. PRIOR TO COMMENCING WORK, THE CONTRACTOR SHALL SUBMIT (2) COPIES OF MATERIAL SAFETY DATA SHEETS (MSDS) FOR ALL PRODUCTS USED TO PERFORM THE WORK.

VERIFY ACTUAL LOCATIONS AND ELEVATIONS WITH DNR ENGINEER.

ALL WORK SHALL CONFORM TO AND BE PERFORMED IN ACCORDANCE WITH ALL APPLICABLE CODES AND ORDINANCES.

THE CONTRACTOR SHALL VISIT THE SITE AND INSPECT THE PROJECT AREA AND THOROUGHLY FAMILIARIZE THEMSELVES WITH THE ACTUAL JOB CONDITIONS PRIOR TO BIDDING AND THE START OF WORK. FAILURE TO VISIT THE PROJECT SITE SHALL NOT RELIEVE THE CONTRACTOR FROM PERFORMING THE WORK IN ACCORDANCE TO THE PLANS, SPECIFICATION, SPECIAL PROVISIONS AND CONTRACT.

THE CONTRACTOR SHALL VERIFY, AT THE SITE, ALL DIMENSIONS AND CONDITIONS SHOWN ON THE PLANS AND SHALL NOTIFY THE DNR ENGINEER OF ANY DISCREPANCIES, OMISSIONS, AND/OR CONFLICTS PRIOR TO PROCEEDING WITH THE WORK.

IT SHALL BE THE CONTRACTOR'S RESPONSIBILITY TO PROVIDE WASTE AREAS OR DISPOSAL SITES FOR EXCESS MATERIAL (EXCAVATED MATERIAL OR BROKEN CONCRETE) WHICH IS NOT DESIRABLE TO BE INCORPORATED INTO THE WORK INVOLVED ON THIS PROJECT. NO PAYMENT FOR OVERHAUL WILL BE ALLOWED FOR MATERIAL HAULED TO THESE SITES. NO MATERIAL SHALL BE PLACED WITHIN THE RIGHT-OF-WAY, UNLESS SPECIFICALLY STATED IN THE PLANS OR APPROVED BY THE DNR ENGINEER.

THE CONTRACTOR SHALL NOT DISTURB DESIRABLE GRASS AREAS AND DESIRABLE TREES OUTSIDE THE CONSTRUCTION LIMITS. THE CONTRACTOR WILL NOT BE PERMITTED TO PARK OR SERVICE VEHICLES AND EQUIPMENT OR USE THESE AREAS FOR STORAGE OF MATERIALS. STORAGE, PARKING AND SERVICE AREAS WILL BE SUBJECT TO THE APPROVAL OF THE DNR ENGINEER.

WHERE UTILITIES AND FIXTURES ARE SHOWN AS EXISTING ON THE PLANS OR ENCOUNTERED WITHIN THE CONSTRUCTION AREA, IT SHALL BE THE RESPONSIBILITY OF THE CONTRACTOR TO NOTIFY THE DNR ENGINEER OF THOSE UTILITIES PRIOR TO THE BEGINNING OF ANY CONSTRUCTION. THE CONTRACTOR SHALL BE AFFORDED ACCESS TO THESE FACILITIES FOR NECESSARY MODIFICATION OF SERVICES. UNDERGROUND FACILITIES, STRUCTURES AND UTILITIES HAVE BEEN PLOTTED FROM AVAILABLE SURVEYS AND RECORDS AND THEREFORE THEIR LOCATIONS MUST BE CONSIDERED APPROXIMATE ONLY. IT IS POSSIBLE THERE MAY BE OTHERS, THE EXISTENCE OF WHICH IS PRESENTLY NOT KNOWN OR SHOWN. IT IS THE CONTRACTOR'S RESPONSIBILITY TO DETERMINE THEIR EXISTENCE AND EXACT LOCATION AND TO AVOID DAMAGE THERETO. NO CLAIMS FOR ADDITIONAL COMPENSATION WILL BE ALLOWED TO THE CONTRACTOR FOR ANY INTERFERENCE OR DELAY CAUSED BY SUCH WORK.

THE CONTRACTOR SHALL SHAPE GRADED AREA TO MAINTAIN SURFACE DRAINAGE. ALL ELEVATIONS ARE TO FINISH GRADE.

THE CONTRACTOR IS EXPECTED TO HAVE MATERIALS, EQUIPMENT, AND LABOR AVAILABLE ON A DAILY BASIS TO INSTALL AND MAINTAIN EROSION CONTROL FEATURES ON THE PROJECT. THIS MAY INVOLVE SEEDING, SILT FENCE, ROCK DITCH CHECKS, SILT BASINS OR SILT DIKES.

*DIVISIONS 20-41 OF THE STANDARD SPECIFICATIONS FOR BRIDGE AND HIGHWAY CONSTRUCTION, CURRENT EDITION WITH GS-15011 SHALL APPLY TO THIS PROJECT.

PROJECT NARRATIVE

The contractor shall be responsible for providing and installing all items within this narrative, the drawings, and project manual unless specifically noted. This narrative is not meant to be a comprehensive account of all items to be covered by the contract, review all documents. The contractor is responsible for field verifying all dimensions and establishing all quantities that are dictated as "lump sum".

This project, Red Haw State Park – Design Guide Shelter, shall commence after the contract is executed and shall be completed no later than April 30, 2024.

The contractor shall build a new State Parks Design Guide shelter at the location shown on A-010. The Contractor shall demolish two concrete building slabs and any foundations associated with them. The Contractor shall also demolish, in it's entirety, the existing concrete beach building and surrounding concrete slab. Contractor shall cut and cap any utilities at the beach building and shall prep ground for new concrete and shelter.

The Design Guide Shelter shall be made of rough-sawn Douglas-Fir Select Structural Grade lumber and all roof decking shall be 3x6 Tongue and Groove Douglas-Fir Select V-groove decking. Contractor shall pour new concrete footings then pour the new concrete slab as shown. The Contractor shall then erect the shelter as shown on A-500 – A-502. The contractor shall pour new sidewalk and ADA parking space as shown on the plans, pour new rock on the drive and restore all disturbed areas.

ROOFING AND ROOF DECKING REQUIREMENTS

ROOF SHINGLES AND UNDERLAYMENT

The Contractor shall then install 40mil self-adhered water and ice barrier on all ridges, eaves, rakes, and gable ends a minimum of 24" from the edge. The Contractor shall then cover the entire roof with synthetic, non-woven, roofing underlayment and the shingle the entire roof with one of the following shingles:

Approved list of Shingles – Contractor must submit on the intended shingle to be used.
Owens Corning – Duration Designer – Summer Harvest
Atlas – Pinnacle Pristine – Majestic Shake
Certainteed – Landmark Pro – Weathered Wood

Contractor shall follow manufacturer's installation instructions and shall follow all applicable codes and local ordinances regarding roofing.

SOLID WOOD ROOF DECKING

All roof decking shall be 3x6 Tongue and Groove Douglas-Fir Select V-groove decking, shall be arranged in either one of the three following layup configurations, "two-span continuous, cantilevered intermixed, or combination simple/two-span continuous". The Contractor shall install decking by first, pre-drilling between the tongues every 2'-6" o.c., in a staggered fashion from one decking board to the next. Contractor shall screw decking to one another via the pre-drilled holes in the tongues with one (1) #12 – 7" black e-coat truss drill-point roofing screw every 2'-6" o.c., stagger screws from one decking board to another. Contractor to screw decking boards to trusses with two (2) #14 – 4" black e-coat truss drill-point roofing screws at each truss support.

ROOF DECKING DETAILS

1. 3x6 Tongue and Groove Douglas-Fir Select V-groove decking, apply two (2) coats of clear, semi-gloss, exterior spar-urethane.
2. #12 – 7" black e-coat truss drill-point roofing screw every 2'-6" o.c., stagger screws from one decking board to another. Counter-sink all screw heads so they do not interfere with adjacent decking.
3. #14 – 4" black e-coat truss drill-point roofing screws at each truss support. Drive screws into wood far enough to be flush with surface.
4. Heavy Timber truss.

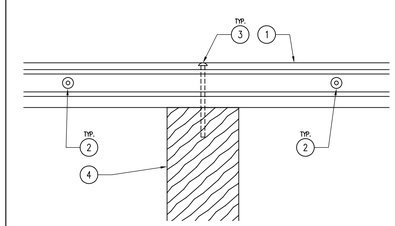

3X6 ROOF DECKING TONGUE PLAN VIEW

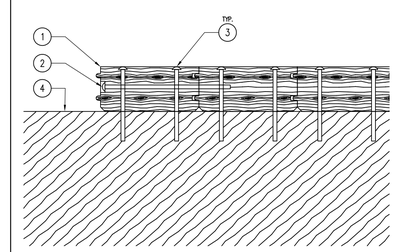

3X6 ROOF DECKING SECTION

CONSULTANT:

IOWA DEPARTMENT OF NATURAL RESOURCES
ENGINEERING SERVICES - WALLACE BUILDING
502 E. 9TH ST., DES MOINES, IA 50319-0034
P: 515.725.8200
F: 515.725.8202

PROJECT NARRATIVE AND NOTES

DESIGN GUIDE SHELTER FOR:
RED HAW STATE PARK
CHARITON, IA 50049
24550 US 34

NO.	BY DATE	REVISION

DRAWN BY:
PROJECT NUMBER: 22-05-04-02
CHK'D BY:
DATE: 07.25.2023
SHEET NO: A-002

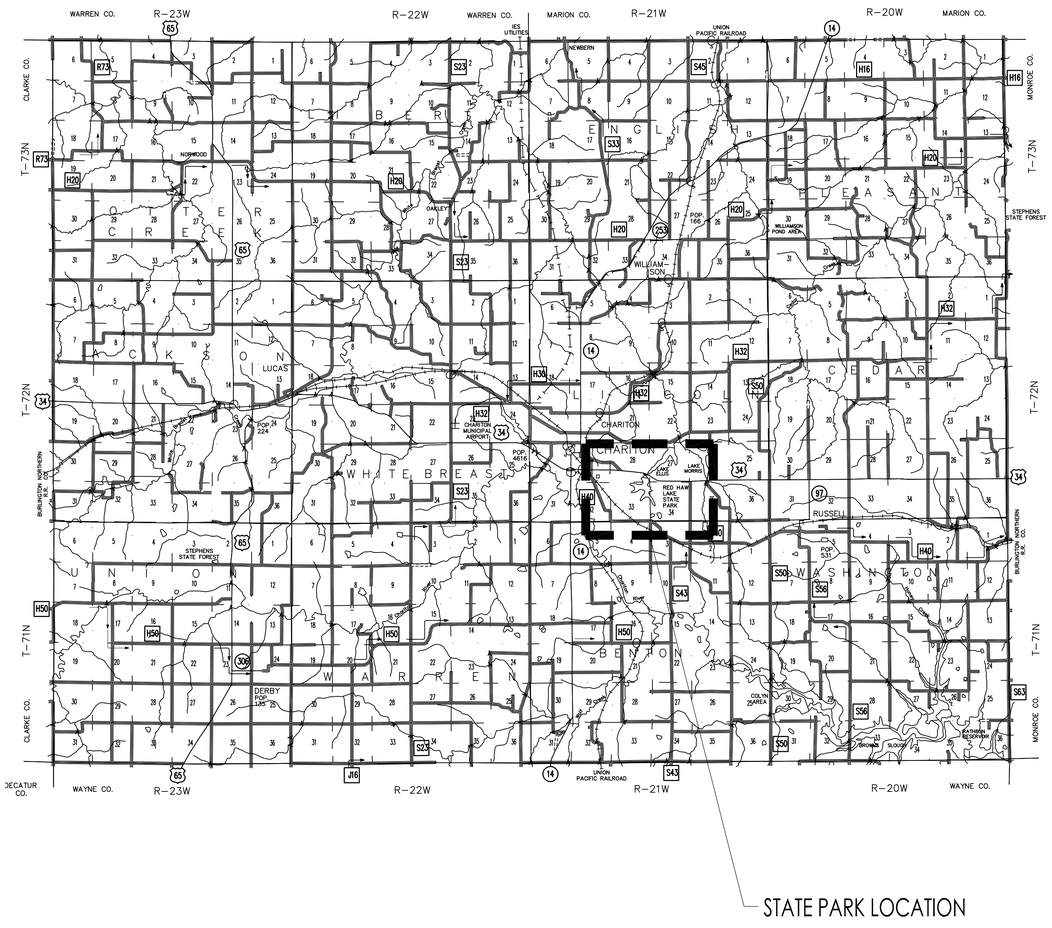

02 LUCAS COUNTY – RED HAW STATE PARK
SCALE: NTS

01 RED HAW PARK – PROJECT LOCATION
SCALE: NTS

CONSULTANT:

IOWA DEPARTMENT OF NATURAL RESOURCES
ENGINEERING SERVICES - WALLACE BUILDING
502 E. 9TH ST., DES MOINES, IA 50319-0034
P: 515.725.8200
F: 515.725.8202

PROJECT LOCATION

DESIGN GUIDE SHELTER FOR:
RED HAW STATE PARK

CHARITON, IA 50049

24550 US 34

NO.	BY / DATE	REVISION

DRAWN BY:
PROJECT NUMBER: 22-05-04-02
CHK'D BY:
DATE: 07.25.2023
SHEET No:
A-003

01 DEMOLITION SITE PLAN
SCALE: 1/32" = 1'-0"

KEYNOTES

1. DEMOLISH EXISTING SIDEWALK. FILL, COMPACT, AND RESTORE DISTURBED AREA.
2. DEMOLISH EXISTING BUILDING FOUNDATIONS AND CONCRETE SLABS. FILL, COMPACT, AND RESTORE AREA.
3. DEMOLISH EXISTING CONCRETE BEACH BUILDING STRUCTURE, FOUNDATIONS AND SLAB. FILL, COMPACT, AND RESTORE DISTURBED AREA. REFER TO ASBESTOS REPORT FOR MORE INFORMATION OF ABATEMENT OF ASBESTOS PRIOR TO COMPLETE DEMOLITION.
4. EXISTING SIDEWALK TO REMAIN.

GENERAL NOTES

A. ALL ELECTRICAL SHALL BE NEC CODE COMPLIANT AND ALL CODES AND ORDINANCES SHALL BE FOLLOWED WHICH ARE REQUIRED BY LAW. ALL OUTLETS TO BE MOUNTED AT 42" A.F.F.
B. FIELD VERIFY ALL DIMENSIONS PRIOR TO CONSTRUCTION.
C. PRECAST CONCRETE MODULAR BUILDING BY HUFFCUTT OR PRE-APPROVED EQUAL.
D. ALL SANITARY AND WATER LINE WORK SHALL COMPLY WITH ALL APPLICABLE CODES AS NECESSARY BY LAW PER STATE AND LOCAL JURISDICTION.
E. REMOVE ALL TREES WHICH CONFLICT WITH THE INSTALLATION OF THE NEW SHOWER/RESTROOM BUILDING, PROTECT ALL TREES IN PLACE WHICH MAY REMAIN.
F. GRADE EXISTING SITE -6" BELOW CURRENT BUILDING ELEVATION FOR PROPER INSTALL OF PRECAST BUILDING. COORDINATE WITH DNR INSPECTOR AND PRECAST SHOWER BUILDING MANUFACTURER PRIOR TO PROJECT COMMENCEMENT.
G. CONTRACTOR TO RESTORE ALL DISTURBED AREAS OF CONSTRUCTION AND DEMOLITION, FILL HOLES, GRADE AND SEED.

CONSULTANT:

IOWA DEPARTMENT OF NATURAL RESOURCES
ENGINEERING SERVICES - WALLACE BUILDING
502 E. 9TH ST., DES MOINES, IA 50319-0034
P: 515.725.8200
F: 515.725.8202

DEMOLITION SITE PLAN

DESIGN GUIDE SHELTER FOR:
RED HAW STATE PARK

24550 US 34
CHARITON, IA 50049

NO.	BY DATE	REVISION

DRAWN BY:
PROJECT NUMBER: 22-05-04-02
CHK'D BY:
DATE: 07.25.2023
SHEET No: A-005

01 BEACH SHELTER SITE PLAN
SCALE: 1/16" = 1'-0"

KEYNOTES

1. 5" THICK X 5'-0" WIDE CONCRETE SIDEWALK OVER 4" SUBBASE WITH THREE (3) #4 REBAR RUNNING LINEAR ENTIRE LENGTH OF SIDEWALK 18" O.C.
2. EXISTING ROAD TO REMAIN, SPREAD 30 TONS OF ROCK ON LOCATION DESIGNATED BY DNR INSPECTOR.
3. ADA PARKING SIGN, REFER TO SHEET A-011 FOR DETAILS.
4. PRECAST CONCRETE WHEEL STOPS, REFER TO SHEET A-011 FOR DETAILS.
5. CONCRETE ADA PARKING AREA WITH STRIPING PAINT, REFER TO SHEET A-011 FOR DETAILS.
6. CONCRETE SHELTER FOOTING, REFER TO SHEET A-500.
7. 6" THICK CONCRETE SHELTER SLAB WITH 4" SUBBASE. #4 REBAR 24" O.C. BOTH DIRECTIONS. FINAL SLAB ELEVATION DETERMINED BY DNR INSPECTOR, SLOPE 1% TO DRAIN WATER. REFER TO REFERENCE PLAN SHEET A-500.
8. 4" OF CLASS A ROAD STONE OVER EXISTING DRIVE, WORK WITH DNR INSPECTOR FOR EXACT PLACEMENT.
9. INSTALL ONE NEW PILOT ROCK ASW-24-B18 SURFACE MOUNT GRILL, OR APPROVED EQUAL, WITH 6" THICK CONCRETE GRILL PAD WITH #4 REBAR 24" O.C., BOTH DIRECTIONS, OVER 4" SUBBASE.
10. EXISTING BUILDING TO REMAIN.
11. ½" EXPANSION WITH FLOWABLE POLYURETHANE CAULK CONTINUOUS.
12. ELECTRICAL HAND-HOLE PULL BOX FOR FUTURE ELECTRICAL TO SHELTER.
13. 2" SCHEDULE 40 PVC CONDUIT FOR FUTURE UNDERGROUND ELECTRICAL WITH PULL-STRING.
14. EXISTING SIDEWALK TO REMAIN.
15. ½" SCHEDULE 40 PVC CONDUIT FOR UNDERGROUND ELECTRICAL WITH PULL-STRING FOR FUTURE ELECTRICAL, TRANSITION TO FLEXIBLE EXTERIOR CONDUIT ABOVE GROUND AND SECURE CONDUIT.
16. 24" WIDE X WIDTH OF SIDEWALK, NEENAH CAST-IRON DETECTION PANELS, OR APPROVED EQUAL.
17. WEATHERPROOF ELECTRICAL BOX AT ALL COLUMNS, FOR FUTURE ELECTRICAL. SECURE TO COLUMNS 18" A.F.F. AND INSTALL BLANK COVERPLATE IN LIEU OF DUPLEX RECEPTACLE.

GENERAL NOTES

A. FIELD VERIFY ALL DIMENSIONS PRIOR TO CONSTRUCTION.
B. ALL STAIN TO BE TWP 100 SERIES STAIN, COAT ALL MEMBERS TWO (2) COATS, COLOR TO BE 116 RUSTIC. STAIN COLUMNS, TRUSSES, AND BEAMS.
C. EXPOSED WOOD ROOF DECKING TO RECEIVE TWO (2) COATS OF CLEAR GLOSS, UV RESISTANT, SPAR URETHANE.
D. REFER TO SITE PLAN FOR MORE INFORMATION.
E. ALL HARDWARE (EG – BOLTS, NUTS, WASHERS) TO BE HOT-DIPPED GALVANIZED.
F. SLOPE SLAB TO DRAIN 1% AS SHOWN ON SITE PLAN. CONCRETE BASES SHALL HAVE A CONSISTENT (LEVEL) TOP ELEVATION, WOOD COLUMNS SHALL BE THE SAME LENGTH THROUGHOUT.

CONSULTANT:

IOWA DEPARTMENT OF NATURAL RESOURCES
ENGINEERING SERVICES - WALLACE BUILDING
502 E. 9TH ST., DES MOINES, IA 50319-0034
P: 515.725.8200
F: 515.725.8202

BEACH SHELTER SITE PLAN

DESIGN GUIDE SHELTER FOR:
RED HAW STATE PARK

CHARITON, IA 50049

24550 US 34

NO.	BY DATE	REVISION

DRAWN BY:
PROJECT NUMBER: 22-05-04-02
CHK'D BY:
DATE: 07.25.2023
SHEET No: **A-010**

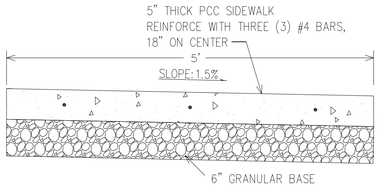

SIDEWALK DETAIL

05 DETAIL – SIDEWALK CROSS-SECTION
SCALE: NTS

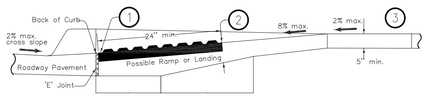

TYPICAL SECTION – CURB RAMP

1 Install a 24" deep (min) x width of sidewalk of Neenah cast-iron detectable warnings at entrance to vehicular traffic lane.

2 Provide a minimum of 6" of concrete below the detectable warning panel.

3 Landing: Maximum slope of 2% in any direction.

04 DETAIL – TRUNCATED DOME DETECTION PANEL
SCALE: NTS

FLAT PARKING BUMPER

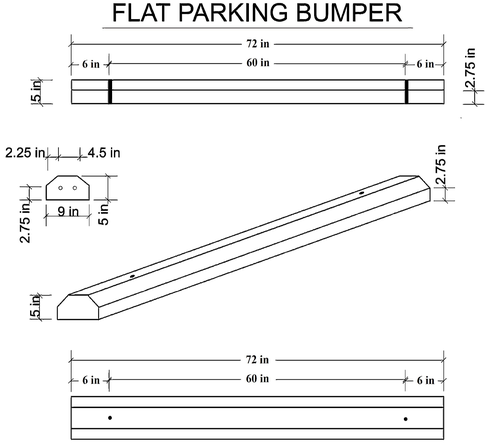

Air Entrained Concrete
4000 p.s.i. @ 28 days
Length: 6'0"
Height: 5"
Width: 9"

03 DETAIL – PRE-CAST CONCRETE PARKING BUMPER
SCALE: NTS

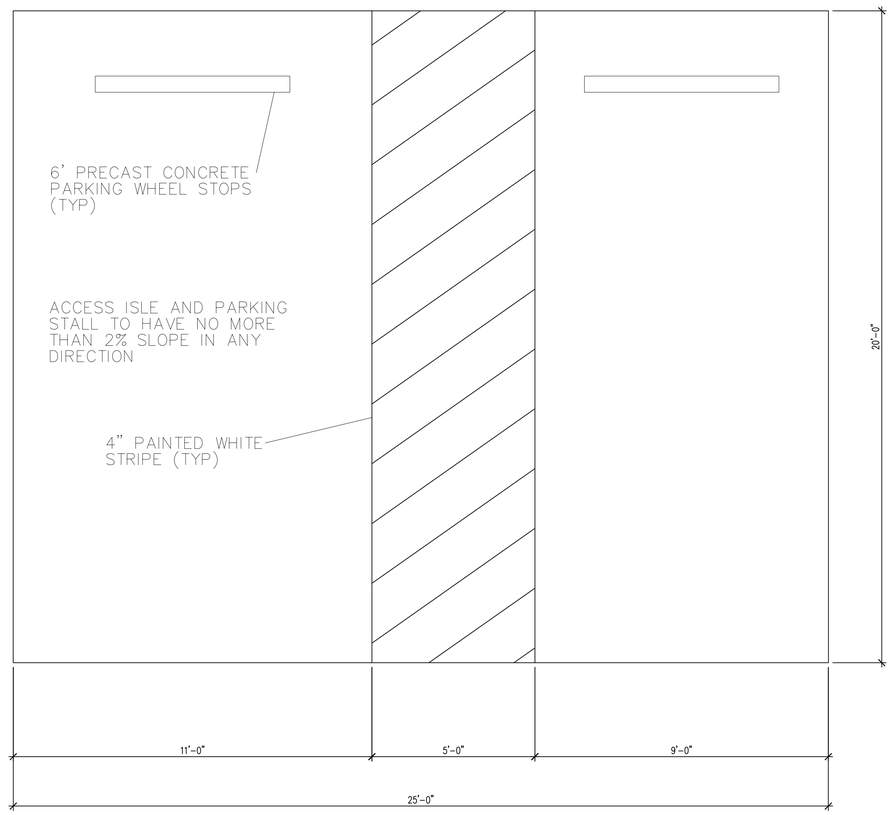

02 DETAIL – ADA PARKING SPACES
SCALE: NTS

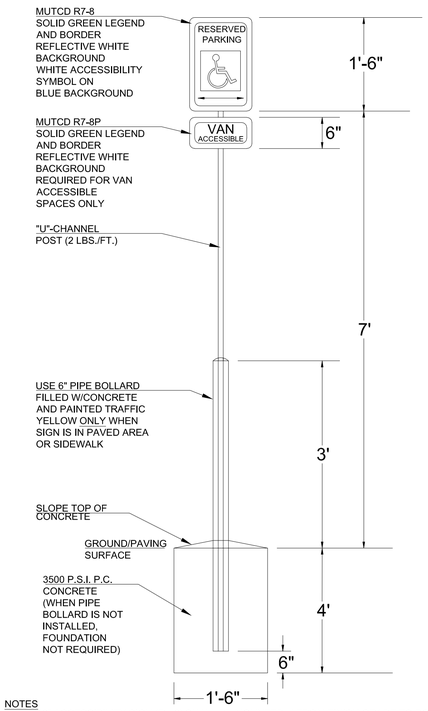

NOTES
1. 12"x18" ACCESSIBILITY SIGN (R7-8) SHALL BE MOUNTED 7' FROM FINISH GRADE TO BOTTOM EDGE OF SIGN FACE. MOUNTING HEIGHT MAY BE REDUCED TO 5' IF PLACED IN A LANDSCAPE AREA IN WHICH PEDESTRIANS ARE NOT EXPECTED TO USE.
2. BOLLARD MAY BE OMITTED IF INSTALLED IN LANDSCAPE AREAS. WHEN INSTALLED IN LANDSCAPE AREAS, MOUNTING POST SHALL BE DRIVEN A MINIMUM OF 3' BELOW FINISHED GRADE. ALTERNATE MOUNTING POSTS MUST BE APPROVED BY THE FIELD INSPECTOR PRIOR TO CONSTRUCTION.
3. SIGNAGE SHALL BE INSTALLED IN FRONT OF EACH ACCESSIBLE SPACE, CENTERED ON THE WIDTH OF THE SPACE.
4. REFER TO AMERICANS WITH DISABILITIES ACT AND ARCHITECTURAL BARRIERS ACT ACCESSIBILITY GUIDELINES (ADAAG), LATEST EDITION, FOR REQUIRED NUMBER OF ACCESSIBLE SPACE. PER ADAAG, ONE VAN ACCESSIBLE SPACE SHALL BE PROVIDED, MINIMUM, WITH ADDITIONAL VAN ACCESSIBLE SPACES PER ADAAG REQUIREMENTS.
5. ALL SIGNAGE SHALL BE ENGINEER GRADE .080 ALUMINUM REFLECTIVE SIGN MEETING THE REQUIREMENTS OF THE MUTCD AND ADAAG.

HANDICAP SIGN DETAIL

NOT TO SCALE

01 DETAIL – ADA PARKING SIGN
SCALE: NTS

CONSULTANT:

IOWA DEPARTMENT OF NATURAL RESOURCES
ENGINEERING SERVICES - WALLACE BUILDING
502 E. 9TH ST., DES MOINES, IA 50319-0034
P: 515.725.8200
F: 515.725.8202

SITE DETAILS

DESIGN GUIDE SHELTER FOR:
RED HAW STATE PARK
24550 US 34
CHARITON, IA 50049

NO.	BY / DATE	REVISION

DRAWN BY:
PROJECT NUMBER: 22-05-04-02
CHK'D BY:
DATE: 07.25.2023
SHEET No:
A-011

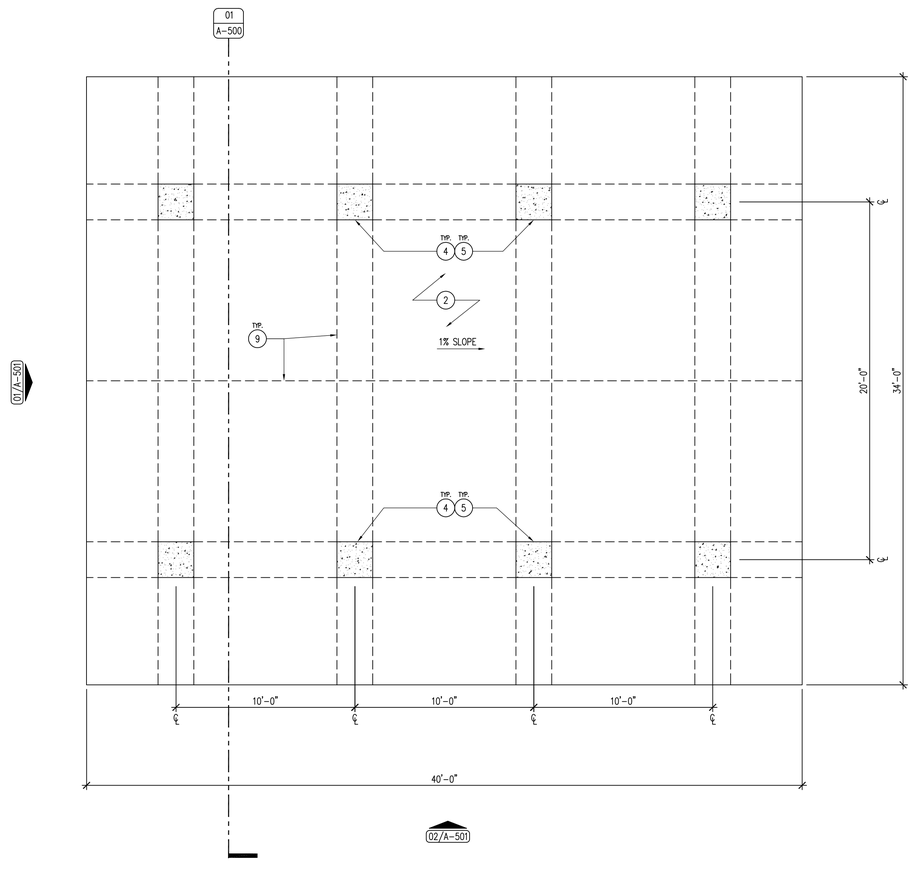

04 REFERENCE FLOOR PLAN
SCALE: 1/4" = 1'-0"

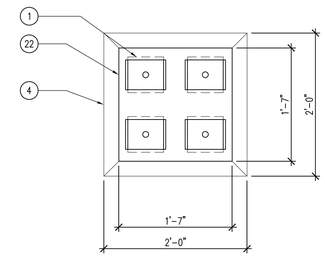

03 DETAIL – COLUMN BASE PLAN
SCALE: 1" = 1'-0"

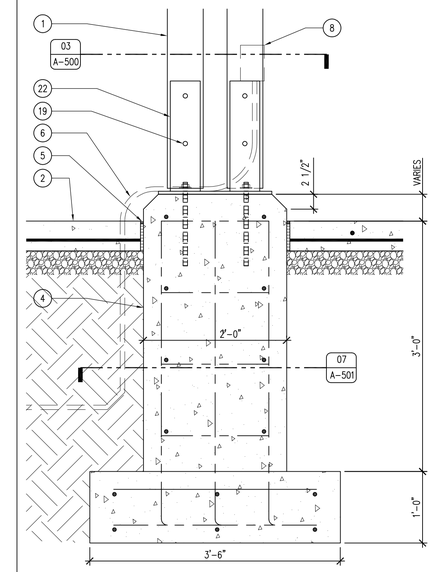

02 DETAIL – FOOTING SECTION
SCALE: 1" = 1'-0"

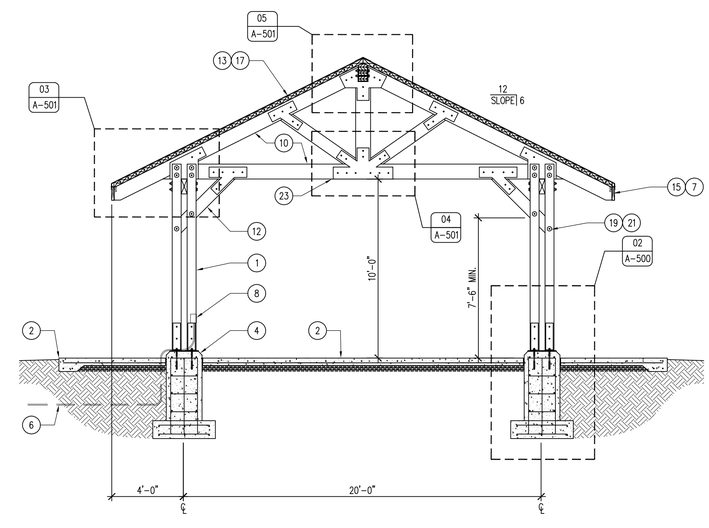

01 BUILDING SECTION
SCALE: 1/4" = 1'-0"

KEYNOTES

1. 6X6 ROUGH SAWN DOUGLAS FIR COLUMNS, FINISH WITH TWP 100 SERIES STAIN.
2. 6" THICK CONCRETE SLAB WITH #4 REBAR 24" O.C. BOTH DIRECTIONS WITH 6" COMPACTED FILL BENEATH. SLOPE CONCRETE (1% SLOPE).
3. 12" WIDE X 12" THICK, THICKENED SLAB EDGE WITH TWO (2) #4 REBAR RUNNING CONTINUOUSLY THE PERIMETER OF THE SLAB.
4. 2'-0" X 2'-0" CONCRETE COLUMN BASE FOUNDATION 4'-0" DEEP MINIMUM WITH SPREAD FOOTING WITH #5 REBAR 12" O.C. ALL DIRECTIONS. EXTEND TOP EDGE 5" ABOVE CONCRETE SLAB, CHAMFER TOP 2"-3" AT 45 DEGREE ANGLE.
5. $\frac{1}{2}$" CONTINUOUS PERIMETER EXPANSION JOINT WITH SELF-LEVELING POLYURETHANE SEALANT.
6. EXTERIOR PVC UNDERGROUND CONDUIT, RUN TO HAND-HOLE, PLACE PULL-CORD FOR FUTURE USE.
7. CONTINUOUS PERIMETER DRIP EDGE, MATCH FASCIA METAL COLOR.
8. EXTERIOR ELECTRICAL BOX WITH BLANK COVERPLATE. TRANSITION FROM UNDERGROUND CONDUIT TO FLEXIBLE WATER-PROOF CONDUIT ABOVE GROUND, SECURE CONDUIT AND ATTACH BOX TO COLUMNS.
9. CONCRETE SAW-CUT CONTROL JOINTS.
10. 4X10 ROUGH SAWN DOUGLAS FIR TRUSS CHORD, STAIN TO BE TWP 100 SERIES, COLOR TBD.
11. 4X8 ROUGH SAWN DOUGLAS FIR TRUSS WEB, STAIN TO BE TWP 100 SERIES, COLOR TBD.
12. 4X8 ROUGH SAWN DOUGLAS FIR KNEE BRACE, BOTTOM OF BRACE TO BE MINIMUM 8'-0" A.F.F., STAIN TO MATCH COLUMNS AND TRUSSES.
13. 3X6 TONGUE AND GROVE DOUGLAS FIR ROOF DECKING, TWO COATS OF CLEAR GLOSS EXTERIOR GRADE (UV RESISTANT) POLYURETHANE.
14. 4X10 ROUGH SAWN DOUGLAS FIR BEAM, MAKE SPLICE CONNECTIONS WITHIN COLUMN POSTS.
15. 2X10 FASCIA BOARD, WRAP ENTIRE FASCIA WITH 26GA STEEL TO MATCH DRIP EDGE.
16. 4X10 ROUGH SAWN DOUGLAS FIR CENTER WEB, STAIN TO BE TWP 100 SERIES, COLOR TBD.
17. ARCHITECTURAL FIBERGLASS SHINGLES (REFER TO SHINGLE NARRATIVE) OVER SYNTHETIC UNDERLAYMENT AND WATER AND ICE GUARD.
18. $\frac{3}{8}$" STEEL CONNECTOR PLATE BRACKET BOTH SIDES, POWDER-COAT PLATES BLACK PRIOR TO INSTALLATION.
19. $\frac{3}{4}$" DIAMETER HOT-DIPPED GALVANIZED HEX-HEAD BOLTS WITH NUTS, FENDER AND LOCK WASHERS.
20. 5 $\frac{1}{2}$" X 12" LAMINATED RIDGE BEAM, STAIN TO MATCH COLUMNS AND TRUSSES.
21. 3" X $\frac{3}{8}$" STEEL FENDER WASHERS, POWDER-COAT BLACK PRIOR TO INSTALLATION.
22. $\frac{1}{2}$" GRADE A36 STEEL COLUMN LEVELING PLATE WITH $\frac{3}{4}$" ANCHOR BOLTS AND WASHERS, EMBED 18" MINIMUM. $\frac{3}{8}$" THICK STEEL TONGUES TO EXTEND 18" WITH $\frac{1}{4}$" BASE SHIM WELDED TO PLATE. POWDER-COAT ENTIRE ASSEMBLY BLACK PRIOR TO INSTALLATION.
23. $\frac{3}{8}$" THICK STEEL TRUSS WEB CONNECTOR BRACKET. BRACKET TO HAVE $\frac{3}{8}$" WELDED BOTTOM PLATE AND BRACKETS ON BOTH SIDES TO CREATE ONE SINGLE WEB BRACKET. POWDER-COAT PLATES BLACK PRIOR TO INSTALLATION.

GENERAL NOTES

A. FIELD VERIFY ALL DIMENSIONS PRIOR TO CONSTRUCTION.
B. ALL STAIN TO BE TWP 100 SERIES STAIN, COAT ALL MEMBERS TWO (2) COATS, COLOR TO BE 116 RUSTIC. STAIN COLUMNS, TRUSSES, AND BEAMS.
C. EXPOSED WOOD ROOF DECKING TO RECEIVE TWO (2) COATS OF CLEAR GLOSS, UV RESISTANT, SPAR URETHANE.
D. REFER TO SITE PLAN FOR MORE INFORMATION.
E. ALL HARDWARE (EG – BOLTS, NUTS, WASHERS) TO BE HOT-DIPPED GALVANIZED..
F. SLOPE SLAB TO DRAIN 1% AS SHOWN ON SITE PLAN. CONCRETE BASES SHALL HAVE A CONSISTENT (LEVEL) TOP ELEVATION RELATIVE TO ONE ANOTHER, WOOD COLUMNS SHALL BE THE SAME LENGTH THROUGHOUT.
G. REFER TO DECKING LAYOUT NARRATIVE, SHEET A-002, FOR INFORMATION ON 3X6 ROOF DECKING CONSTRUCTION AND INSTALLATION.

CONSULTANT:

IOWA DEPARTMENT OF NATURAL RESOURCES
ENGINEERING SERVICES - WALLACE BUILDING
502 E. 9TH ST., DES MOINES, IA 50319-0034
P: 515.725.8200
F: 515.725.8202

SHELTER PLAN, SECTION, AND DETAILS

DESIGN GUIDE SHELTER FOR:
RED HAW STATE PARK
CHARITON, IA 50049

24550 US 34

NO.	BY / DATE	REVISION

DRAWN BY:
PROJECT NUMBER: 22-05-04-02
CHK'D BY:
DATE: 07.25.2023
SHEET No: A-500

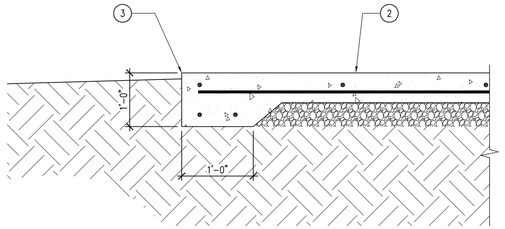

08 DETAIL – THICKENED SLAB EDGE
SCALE: 1" = 1'-0"

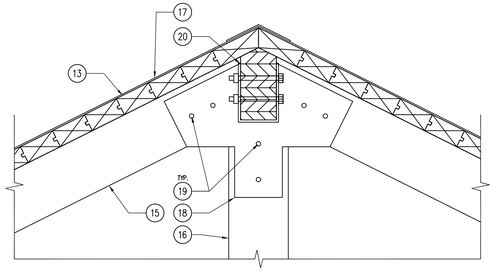

05 DETAIL – RIDGE
SCALE: 1" = 1'-0"

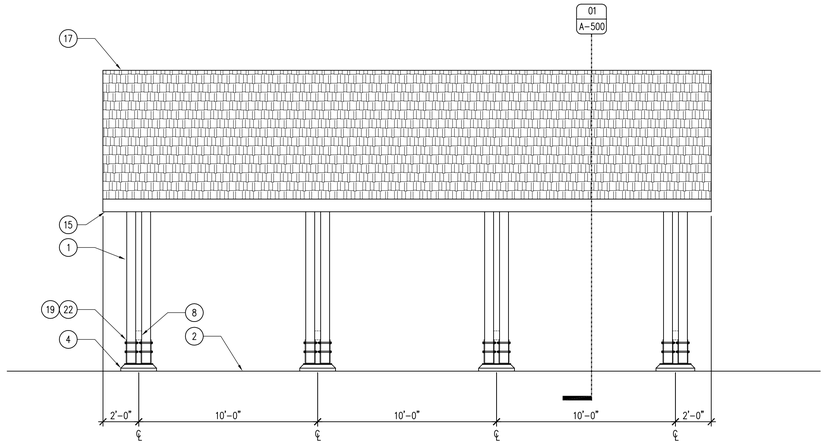

02 BUILDING ELEVATION – EAVE SIDE
SCALE: 1/4" = 1'-0"

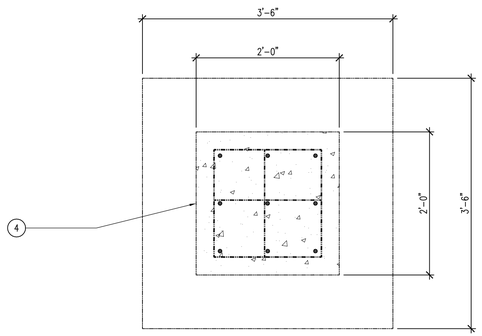

07 DETAIL – COLUMN FOOTING PLAN
SCALE: 1" = 1'-0"

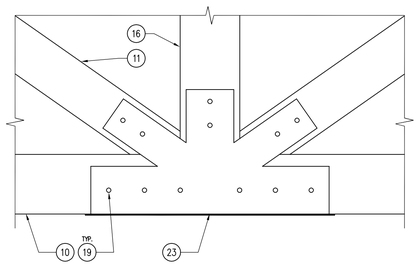

04 DETAIL – TRUSS CONNECTOR
SCALE: 1" = 1'-0"

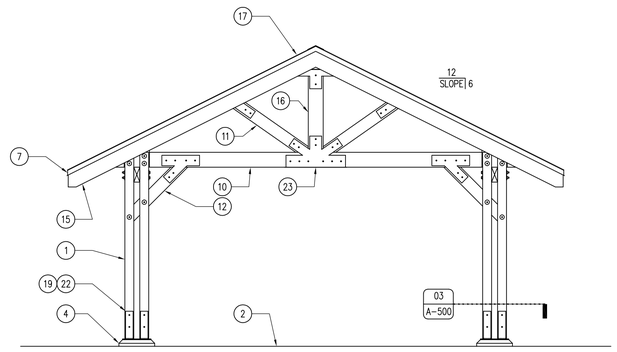

01 BUILDING ELEVATION – GABLE SIDE
SCALE: 1/4" = 1'-0"

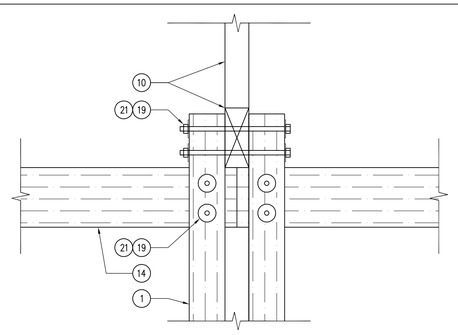

06 DETAIL – BEAM & TRUSS CONNECTIONS
SCALE: 1" = 1'-0"

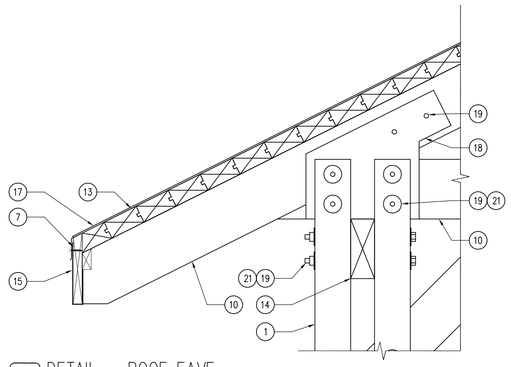

03 DETAIL – ROOF EAVE
SCALE: 1" = 1'-0"

KEYNOTES

1. 6X6 ROUGH SAWN DOUGLAS FIR COLUMNS, FINISH WITH TWP 100 SERIES STAIN.
2. 6" THICK CONCRETE SLAB WITH #4 REBAR 24" O.C. BOTH DIRECTIONS WITH 6" COMPACTED FILL BENEATH. SLOPE CONCRETE (1% SLOPE).
3. 12" WIDE X 12" THICK, THICKENED SLAB EDGE WITH TWO (2) #4 REBAR RUNNING CONTINUOUSLY THE PERIMETER OF THE SLAB.
4. 2'-0" X 2'-0" CONCRETE COLUMN BASE FOUNDATION 4'-0" DEEP MINIMUM WITH SPREAD FOOTING WITH #5 REBAR 12" O.C. ALL DIRECTIONS. EXTEND TOP EDGE 5" ABOVE CONCRETE SLAB, CHAMFER TOP 2"-3" AT 45 DEGREE ANGLE.
5. ½" CONTINUOUS PERIMETER EXPANSION JOINT WITH SELF-LEVELING POLYURETHANE SEALANT.
6. EXTERIOR PVC UNDERGROUND CONDUIT, RUN TO HAND-HOLE, PLACE PULL-CORD FOR FUTURE USE.
7. CONTINUOUS PERIMETER DRIP EDGE, MATCH FASCIA METAL COLOR.
8. EXTERIOR ELECTRICAL BOX WITH BLANK COVERPLATE. TRANSITION FROM UNDERGROUND CONDUIT TO FLEXIBLE WATER-PROOF CONDUIT ABOVE GROUND, SECURE CONDUIT AND ATTACH BOX TO COLUMNS.
9. CONCRETE SAW-CUT CONTROL JOINTS.
10. 4X10 ROUGH SAWN DOUGLAS FIR TRUSS CHORD, STAIN TO BE TWP 100 SERIES, COLOR TBD.
11. 4X8 ROUGH SAWN DOUGLAS FIR TRUSS WEB, STAIN TO BE TWP 100 SERIES, COLOR TBD.
12. 4X8 ROUGH SAWN DOUGLAS FIR KNEE BRACE, BOTTOM OF BRACE TO BE MINIMUM 8'-0" A.F.F., STAIN TO MATCH COLUMNS AND TRUSSES.
13. 3X6 TONGUE AND GROVE DOUGLAS FIR ROOF DECKING, TWO COATS OF CLEAR GLOSS EXTERIOR GRADE (UV RESISTANT) POLYURETHANE.
14. 4X10 ROUGH SAWN DOUGLAS FIR BEAM, MAKE SPLICE CONNECTIONS WITHIN COLUMN POSTS.
15. 2X10 FASCIA BOARD, WRAP ENTIRE FASCIA WITH 26GA STEEL TO MATCH DRIP EDGE.
16. 4X10 ROUGH SAWN DOUGLAS FIR CENTER WEB, STAIN TO BE TWP 100 SERIES, COLOR TBD.
17. ARCHITECTURAL FIBERGLASS SHINGLES (REFER TO SHINGLE NARRATIVE) OVER SYNTHETIC UNDERLAYMENT AND WATER AND ICE GUARD.
18. ⅜" STEEL CONNECTOR PLATE BRACKET BOTH SIDES, POWDER-COAT PLATES BLACK PRIOR TO INSTALLATION.
19. ¾" DIAMETER HOT-DIPPED GALVANIZED HEX-HEAD BOLTS WITH NUTS, FENDER AND LOCK WASHERS.
20. 5 ½" X 12" LAMINATED RIDGE BEAM, STAIN TO MATCH COLUMNS AND TRUSSES.
21. 3" X ⅛" STEEL FENDER WASHERS, POWDER-COAT BLACK PRIOR TO INSTALLATION.
22. ½" GRADE A36 STEEL COLUMN LEVELING PLATE WITH ¾" ANCHOR BOLTS AND WASHERS, EMBED 18" MINIMUM. ⅜" THICK STEEL TONGUES TO EXTEND 18" WITH ½" BASE SHIM WELDED TO PLATE. POWDER-COAT ENTIRE ASSEMBLY BLACK PRIOR TO INSTALLATION.
23. ⅜" THICK STEEL TRUSS WEB CONNECTOR BRACKET. BRACKET TO HAVE ⅜" WELDED BOTTOM PLATE AND BRACKETS ON BOTH SIDES TO CREATE ONE SINGLE WEB BRACKET. POWDER-COAT PLATES BLACK PRIOR TO INSTALLATION.

GENERAL NOTES

A. FIELD VERIFY ALL DIMENSIONS PRIOR TO CONSTRUCTION.
B. ALL STAIN TO BE TWP 100 SERIES STAIN, COAT ALL MEMBERS TWO (2) COATS, COLOR TO BE 116 RUSTIC. STAIN COLUMNS, TRUSSES, AND BEAMS.
C. EXPOSED WOOD ROOF DECKING TO RECEIVE TWO (2) COATS OF CLEAR GLOSS, UV RESISTANT, SPAR URETHANE.
D. REFER TO SITE PLAN FOR MORE INFORMATION.
E. ALL HARDWARE (EG – BOLTS, NUTS, WASHERS) TO BE HOT-DIPPED GALVANIZED..
F. SLOPE SLAB TO DRAIN 1% AS SHOWN ON SITE PLAN. CONCRETE BASES SHALL HAVE A CONSISTENT (LEVEL) TOP ELEVATION RELATIVE TO ONE ANOTHER, WOOD COLUMNS SHALL BE THE SAME LENGTH THROUGHOUT.
G. REFER TO DECKING LAYOUT NARRATIVE, SHEET A-002, FOR INFORMATION ON 3X6 ROOF DECKING CONSTRUCTION AND INSTALLATION.

CONSULTANT:

IOWA DEPARTMENT OF NATURAL RESOURCES
ENGINEERING SERVICES - WALLACE BUILDING
502 E. 9TH ST., DES MOINES, IA 50319-0034
P: 515.725.8200
F: 515.725.8202

SHELTER ELEVATIONS AND DETAILS

DESIGN GUIDE SHELTER FOR:
RED HAW STATE PARK

CHARITON, IA 50049

24.50 US 34

NO.	BY DATE	REVISION

DRAWN BY:
PROJECT NUMBER: 22-05-04-02
CHK'D BY:
DATE: 07.25.2023
SHEET No: A-501

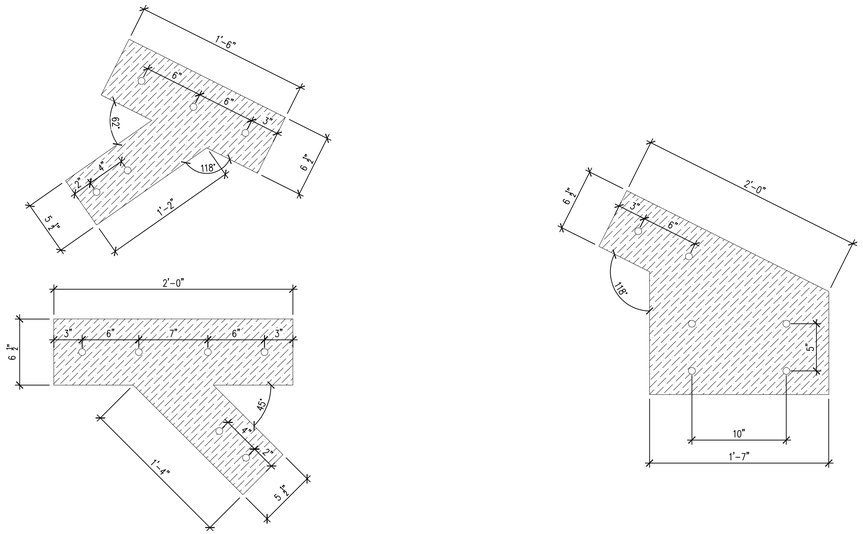

04 DETAIL – TRUSS BRACKETS
SCALE: 1 1/2" = 1'-0"

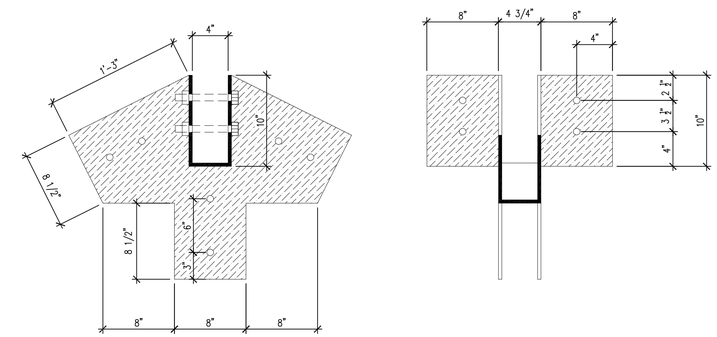

ELEVATION

SIDEVIEW

03 DETAIL – RIDGE BEAM SADDLE
SCALE: 1 1/2" = 1'-0"

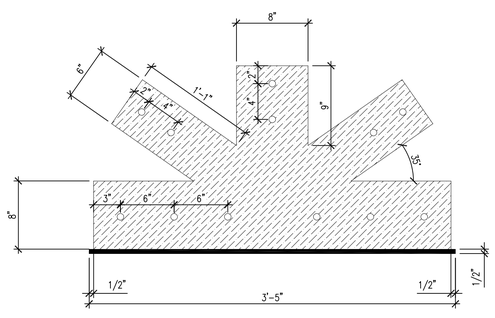

ELEVATION

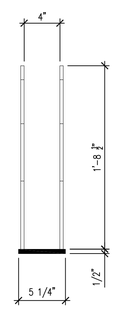

SIDEVIEW

02 DETAIL – TRUSS WEB CONNECTION
SCALE: 1 1/2" = 1'-0"

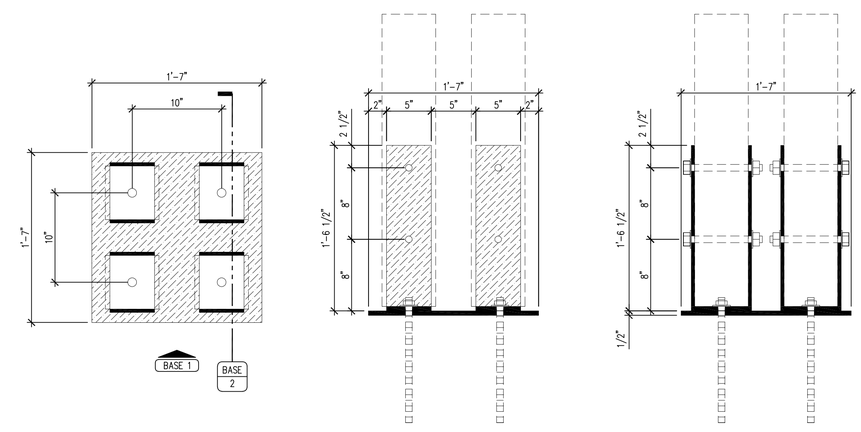

PLAN

BASE 1

BASE 2

01 DETAIL – BASE PLATE BRACKET
SCALE: 1 1/2" = 1'-0"

KEYNOTES

1. 6X6 ROUGH SAWN DOUGLAS FIR COLUMNS, FINISH WITH TWP 100 SERIES STAIN.
2. 6" THICK CONCRETE SLAB WITH #4 REBAR 24" O.C. BOTH DIRECTIONS WITH 6" COMPACTED FILL BENEATH. SLOPE CONCRETE (1% SLOPE).
3. 12" WIDE X 12" THICK, THICKENED SLAB EDGE WITH TWO (2) #4 REBAR RUNNING CONTINUOUSLY THE PERIMETER OF THE SLAB.
4. 2'-0" X 2'-0" CONCRETE COLUMN BASE FOUNDATION 4'-0" DEEP MINIMUM WITH SPREAD FOOTING WITH #5 REBAR 12" O.C. ALL DIRECTIONS. EXTEND TOP EDGE 5" ABOVE CONCRETE SLAB, CHAMFER TOP 2"-3" AT 45 DEGREE ANGLE.
5. ½" CONTINUOUS PERIMETER EXPANSION JOINT WITH SELF-LEVELING POLYURETHANE SEALANT.
6. EXTERIOR PVC UNDERGROUND CONDUIT, RUN TO HAND-HOLE, PLACE PULL-CORD FOR FUTURE USE.
7. CONTINUOUS PERIMETER DRIP EDGE, MATCH FASCIA METAL COLOR.
8. EXTERIOR ELECTRICAL BOX WITH BLANK COVERPLATE. TRANSITION FROM UNDERGROUND CONDUIT TO FLEXIBLE WATER-PROOF CONDUIT ABOVE GROUND, SECURE CONDUIT AND ATTACH BOX TO COLUMNS.
9. CONCRETE SAW-CUT CONTROL JOINTS.
10. 4X10 ROUGH SAWN DOUGLAS FIR TRUSS CHORD, STAIN TO BE TWP 100 SERIES, COLOR TBD.
11. 4X8 ROUGH SAWN DOUGLAS FIR TRUSS WEB, STAIN TO BE TWP 100 SERIES, COLOR TBD.
12. 4X8 ROUGH SAWN DOUGLAS FIR KNEE BRACE, BOTTOM OF BRACE TO BE MINIMUM 8'-0" A.F.F., STAIN TO MATCH COLUMNS AND TRUSSES.
13. 3X6 TONGUE AND GROVE DOUGLAS FIR ROOF DECKING, TWO COATS OF CLEAR GLOSS EXTERIOR GRADE (UV RESISTANT) POLYURETHANE.
14. 4X10 ROUGH SAWN DOUGLAS FIR BEAM, MAKE SPLICE CONNECTIONS WITHIN COLUMN POSTS.
15. 2X10 FASCIA BOARD, WRAP ENTIRE FASCIA WITH 26GA STEEL TO MATCH DRIP EDGE.
16. 4X10 ROUGH SAWN DOUGLAS FIR CENTER WEB, STAIN TO BE TWP 100 SERIES, COLOR TBD.
17. ARCHITECTURAL FIBERGLASS SHINGLES (REFER TO SHINGLE NARRATIVE) OVER SYNTHETIC UNDERLAYMENT AND WATER AND ICE GUARD.
18. ⅜" STEEL CONNECTOR PLATE BRACKET BOTH SIDES, POWDER-COAT PLATES BLACK PRIOR TO INSTALLATION.
19. ¾" DIAMETER HOT-DIPPED GALVANIZED HEX-HEAD BOLTS WITH NUTS, FENDER AND LOCK WASHERS.
20. 5 ½" X 12" LAMINATED RIDGE BEAM, STAIN TO MATCH COLUMNS AND TRUSSES.
21. 3" X ⅜" STEEL FENDER WASHERS, POWDER-COAT BLACK PRIOR TO INSTALLATION.
22. ½" GRADE A36 STEEL COLUMN LEVELING PLATE WITH ¾" ANCHOR BOLTS AND WASHERS, EMBED 18" MINIMUM. ⅜" THICK STEEL TONGUES TO EXTEND 18" WITH ½" BASE SHIM WELDED TO PLATE. POWDER-COAT ENTIRE ASSEMBLY BLACK PRIOR TO INSTALLATION.
23. ⅜" THICK STEEL TRUSS WEB CONNECTOR BRACKET. BRACKET TO HAVE ⅜" WELDED BOTTOM PLATE AND BRACKETS ON BOTH SIDES TO CREATE ONE SINGLE WEB BRACKET. POWDER-COAT PLATES BLACK PRIOR TO INSTALLATION.

GENERAL NOTES

A. FIELD VERIFY ALL DIMENSIONS PRIOR TO CONSTRUCTION.
B. ALL STAIN TO BE TWP 100 SERIES STAIN, COAT ALL MEMBERS TWO (2) COATS, COLOR TO BE 116 RUSTIC. STAIN COLUMNS, TRUSSES, AND BEAMS.
C. EXPOSED WOOD ROOF DECKING TO RECEIVE TWO (2) COATS OF CLEAR GLOSS, UV RESISTANT, SPAR URETHANE.
D. REFER TO SITE PLAN FOR MORE INFORMATION.
E. ALL HARDWARE (EG – BOLTS, NUTS, WASHERS) TO BE HOT-DIPPED GALVANIZED..
F. SLOPE SLAB TO DRAIN 1% AS SHOWN ON SITE PLAN. CONCRETE BASES SHALL HAVE A CONSISTENT (LEVEL) TOP ELEVATION RELATIVE TO ONE ANOTHER, WOOD COLUMNS SHALL BE THE SAME LENGTH THROUGHOUT.
G. REFER TO DECKING LAYOUT NARRATIVE, SHEET A-002, FOR INFORMATION ON 3X6 ROOF DECKING CONSTRUCTION AND INSTALLATION.

CONSULTANT:

IOWA DEPARTMENT OF NATURAL RESOURCES
ENGINEERING SERVICES - WALLACE BUILDING
502 E. 9TH ST., DES MOINES, IA 50319-0034
P: 515.725.8200
F: 515.725.8202

BRACKETS AND CONNECTORS

DESIGN GUIDE SHELTER FOR:
RED HAW STATE PARK

CHARITON, IA 50049

24550 US 34

NO.	BY / DATE	REVISION

DRAWN BY:
PROJECT NUMBER: 22-05-04-02
CHK'D BY:
DATE: 07.25.2023
SHEET No: A-502